LACAVA

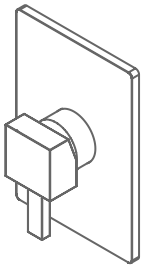

KUBISTA
built-in bath/shower mixer
14PB1.L.S

Specifications:

Installation:	built-in wall mount
Exterior Dimensions:	W: 5 1/8” H: 7 1/4”
Material:	solid brass construction with ceramic disc cartridge
Water use:	4.67 GPM (60 PSI)
Finishes:	CR - polished chrome NI - brushed nickel
Fittings included:	Rough-in # VPB1 and trim # 14PB1.L.S-A

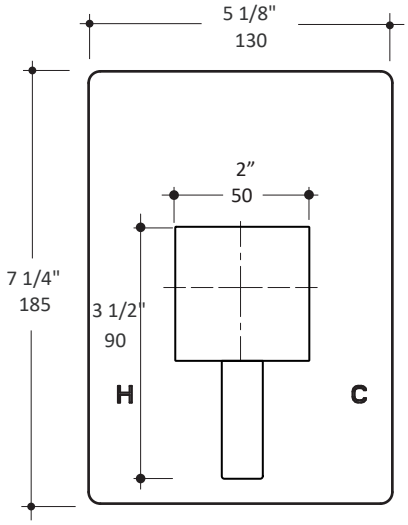

Features:

- pressure balancing valve
- rectangular backplate
- lever handle
- mixing valve regulates volume
- anti-scald protection & temperature regulation for flow rates as low as 1.75 GPM
- screwdriver service stops
- finished wall must be flush with mudguard as marked (1/2” adjustment possible and no extensions available)

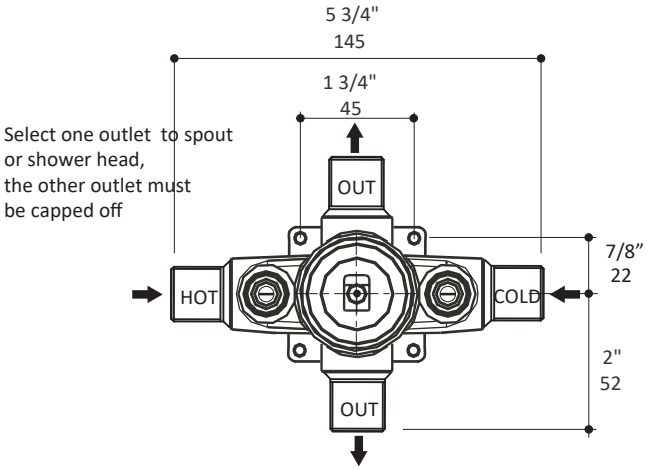

Codes + Standards:

- Meets and exceeds applicable national codes and standards
- CAL-Green compliant

ADA compliant when installed to specific requirements of this regulation

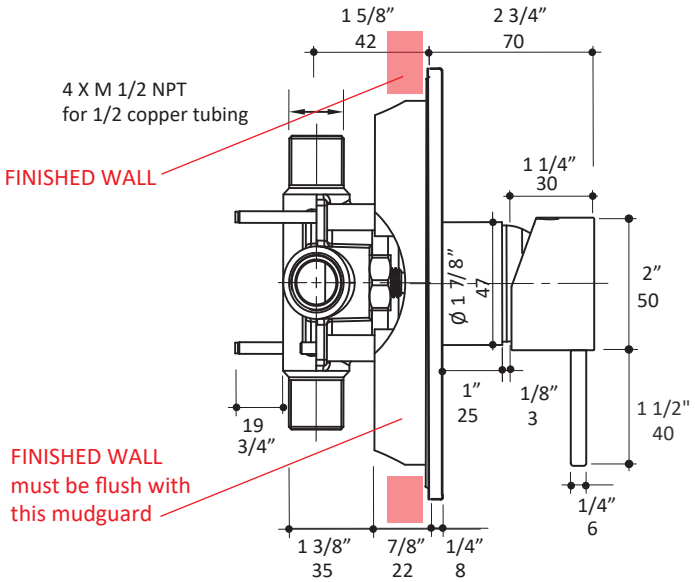

Recommended Items:

- Replacement parts:
  - VPB1 rough-in
  - 14PB1.L.S-A trim
  - VPB1-C ceramic cartridge

LACAVA reserves the right to revise any dimension or information on this sheet without notice. Dimensions are nominal and may vary within an industry accepted tolerance of 1/4”. Drawings provided herein are meant to give the user an idea of the product and are not made to scale. Location of plumbing is meant for reference, your specific application may vary.
Revised: 12/19/2018