LACAVA

CIGNO
deck-mount three-hole faucet
1582S.1

Specifications:

Installation:	deck mount 3-hole, two cross handles
Exterior Dimensions:	H: 7 5/8” SPOUT: 6 3/4”
Material:	solid brass construction
Water use:	1.2 GPM
Pop-up:	yes
Finishes:	CR - polished chrome PN - polished nickel NI - brushed nickel BG - brushed gold 44 - matte black
Cutout Size:	Ø 1 3/8”
Accessories included:	24” flexible hot/cold water supply lines, pop-up drain

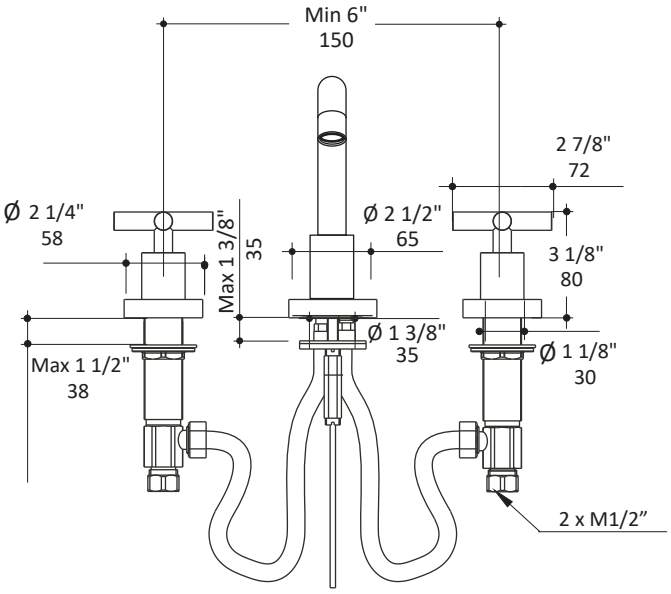

Features:

- Deck-mount 3-hole faucet with goose-neck swiveling spout and two cross handles
- Brass construction with single ceramic disc cartridge
- Complements the Cigno Collection
- Includes flexible supply lines and pop-up drain assembly

Codes + Standards:

- Meets and exceeds applicable national codes and standards
- CAL-Green compliant

ADA compliant when installed to specific requirements of this regulation

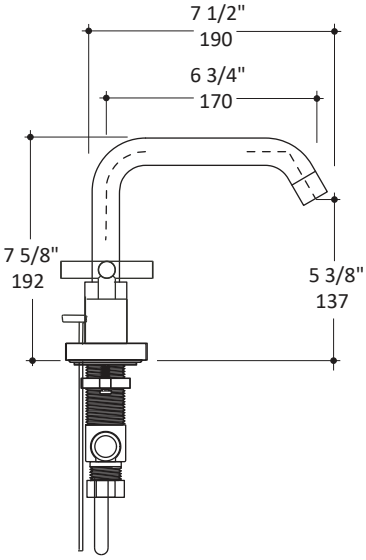

Recommended Items:

- Replacement parts:
  - R025-26 ceramic disc cartridge set hot/cold
  - R1514-AER replacement aerator
- European drain with overflow
  - 7100-12 pop-up drain

LACAVA reserves the right to revise any dimension or information on this sheet without notice. Dimensions are nominal and may vary within an industry accepted tolerance of 1/4”. Drawings provided herein are meant to give the user an idea of the product and are not made to scale. Location of plumbing is meant for reference, your specific application may vary.

Revised: 05/12/2020